60cm Electric Multifunction Oven

BUILT-IN OVEN

PRODUCT CODE: **EO608SX**

euro cooking

FEATURES:

- 9 multi-functions
- Fully programmed electronic touch control
- Contained cavity cooling with tangential cooling fan
- Triple glazed removable inner glass
- Removable rack support
- Telescopic runner
- 2 *oven shelves & 1 baking tray
- Enamel oven interior
- Black Glass / Stainless Steel Finish

3 YEARS **Warranty**

9 MULTI-FUNCTIONS:

CONVENTIONAL
This method of cooking provides traditional cooking with heat from the top and lower elements. Particularly suitable for traditional roasting and baking on the centre shelf only.

FULL GRILL
Full grill is the perfect option for quick grilling. Toast your favourite meals or finish off the tops of your recipes.

DEFROST
In defrost mode, no heating elements are used. Only the fan is activated to circulate air inside the oven for defrosting. It defrosts food up to 30% faster than traditional methods.

THERMOWAVE FAN ASSISTED
This is the position where the heat is coming from the lower and upper heating elements and the heat is circulated into the oven by the fan motor and blades.

OVEN LIGHT
The oven light will automatically turn on once any function is selected, helps to monitor the progress of your cooking.

FAN FORCED COOKING
For the ultimate roast or perfect batch of pastries. The element surrounding the fan delivers even heat for even cooking results, approx. 160ºC - 180ºC is recommended.

FAN GRILL
This function is perfect for fish, chicken Fillets or meat Cutlets.
This Combination is exceptional for cooking meats such as poultry, game and roasts, making them crispy on the outside and tender in the middle. The door can be left closed whilst grilling and Browning will occur from the top element.

BOTTOM ELEMENT
Great for pizza cooking, the bottom element creates the perfect cooking function for base cooked food.

TOP ELEMENT + GRILL ELEMENT
Grill or toast enough of those favourite after school snacks to feed an army with the top element function.

SPECIFICATIONS:

Electrical Requirements	This oven can be connected to a 15 AMP wiring connection. For more information please refer to a qualified electrician.
Power Consumption	220-240v – 50/60Hz - 3.0Kw
Oven Volume Capacity	80 litres (gross) - 70 litres (net)
Weight	36.8kg (gross) - 33.3kg (net)

PRODUCT DIMENTIONS:

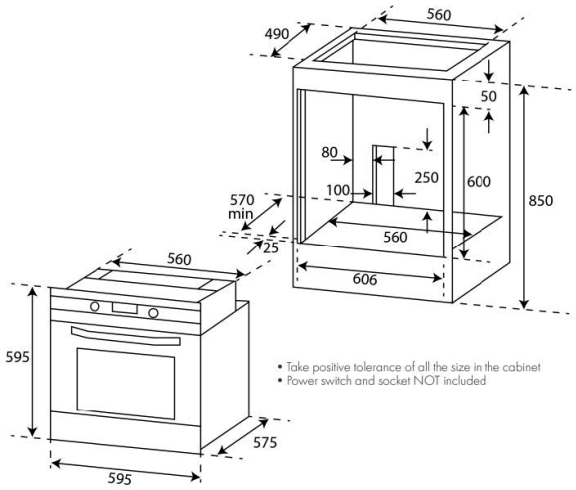

CLEANING AND MAINTENANCE

Easy clean AAA grade enamel interior.
Clean stainless steel using only recommended stainless steel cleaning products. No abrasives, corrosive detergents, bleaches or acids not required for cleaning the oven.

DISCLAIMER: Please note that the measurements and model appearances may change at any time. Euro Appliances reserves the right to change the specifications without notice.